Practical- 4A

Defination:

Design and implementation of BCD and excess-3 parallel adder using two binary adder

Truth Table:

Binary						BCD				
K	Z_8	Z_4	Z_2	Z_1	Decimal	C	S_8	S_4	S_2	S_1
0	0	0	0	0	0	0	0	0	0	0
0	0	0	0	1	1	0	0	0	0	1
0	0	0	1	0	2	0	0	0	1	0
0	0	0	1	1	3	0	0	0	1	1
0	0	1	0	0	4	0	0	1	0	0
0	0	1	0	1	5	0	0	1	0	1
0	0	1	1	0	6	0	0	1	1	0
0	0	1	1	0	7	0	0	1	1	1
0	1	0	0	0	8	0	1	0	0	0
0	1	0	0	1	9	0	1	0	0	1
0	1	0	1	0	10	1	0	0	0	0
0	1	0	1	1	11	1	0	0	0	1
0	1	1	0	0	12	1	0	0	1	0
0	1	1	0	1	13	1	0	0	1	1
0	1	1	1	0	14	1	0	1	0	0
0	1	1	1	1	15	1	0	1	0	1
1	0	0	0	0	16	1	0	1	1	0
1	0	0	0	1	17	1	0	1	1	1
1	0	0	1	0	18	1	1	0	0	0
1	0	0	1	1	19	1	1	0	0	1

→ Now here carry is the decisional component

if $C = 1 \rightarrow$ add 6

$C = 0 \rightarrow$ add 0

K map for C :

	$z_4'z_2'z_1'$	$z_4'z_2'z_1$	$z_4'z_2z_1$	$z_4'z_2z_1'$	$z_4z_2z_1'$	$z_4z_2z_1$	$z_4z_2'z_1$	$z_4z_2'z_1'$
$K'z_8'$	0	0	0	0	0	0	0	0
$K'z_8$	0	0	1	1	1	1	1	1
Kz_8	X	X	X	X	X	X	X	X
Kz_8'	1	1	1	1	X	X	X	X

$$C = K + z_8 z_2 + z_8 z_4$$

Circuit :

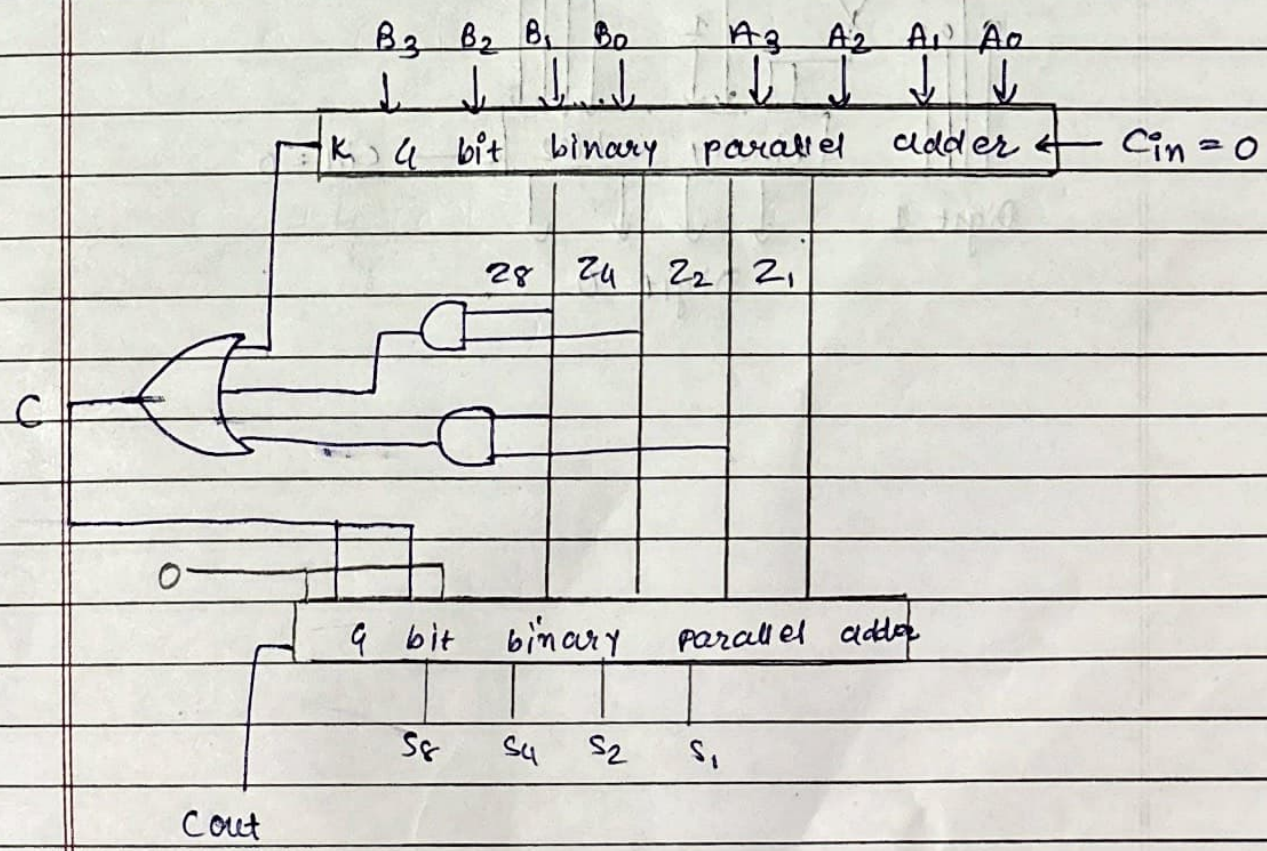

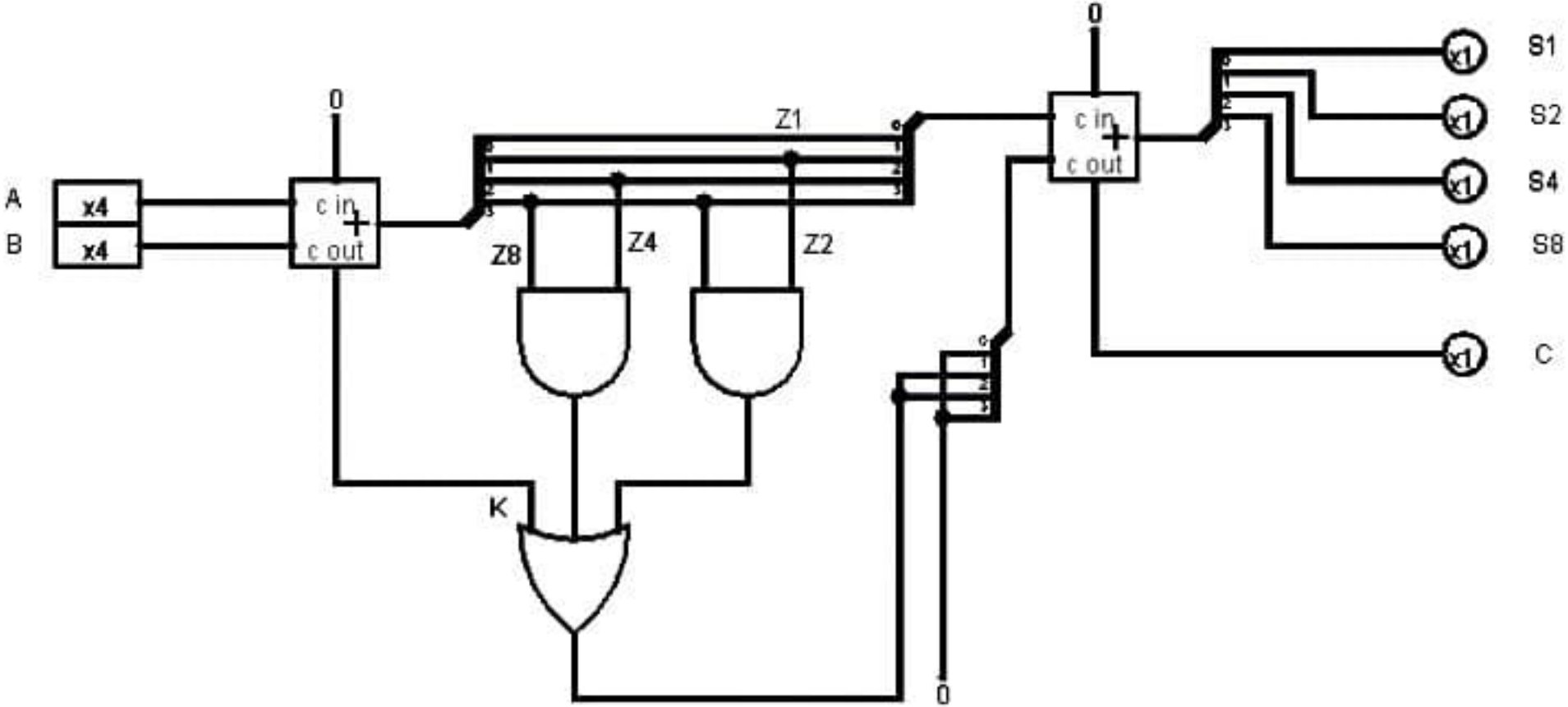
A
B
x4
x4
0
c in
c out
Z1
Z8
Z4
Z2
K
0
c in
c out
0
S1
S2
S4
S8
C
x1
x1
x1
x1
x1

Practical- 4B

Defination:

Design and implementation of excess-3 parallel adder using two binary adders

⇒ Conditions:

1) if C = 1 → add +3 (0011)
2) if C = 0 → add −3 (2's complement of 0011 is 1101)

⇒ Circuit:

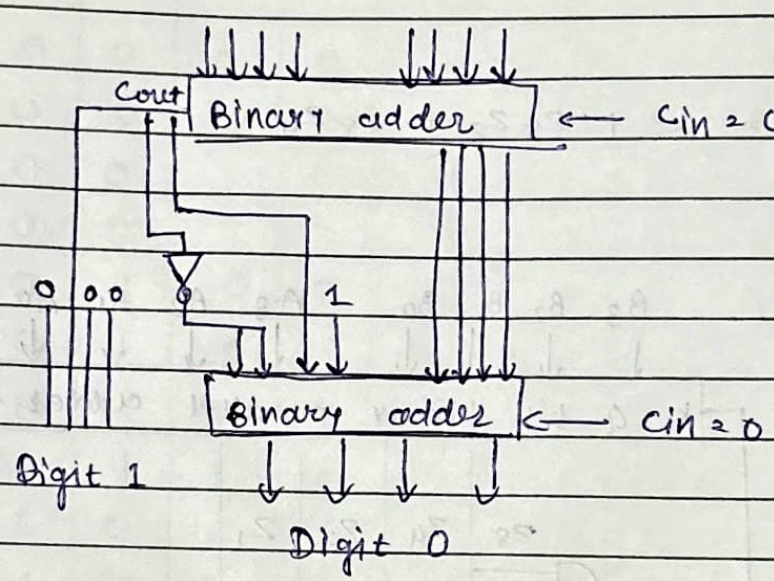
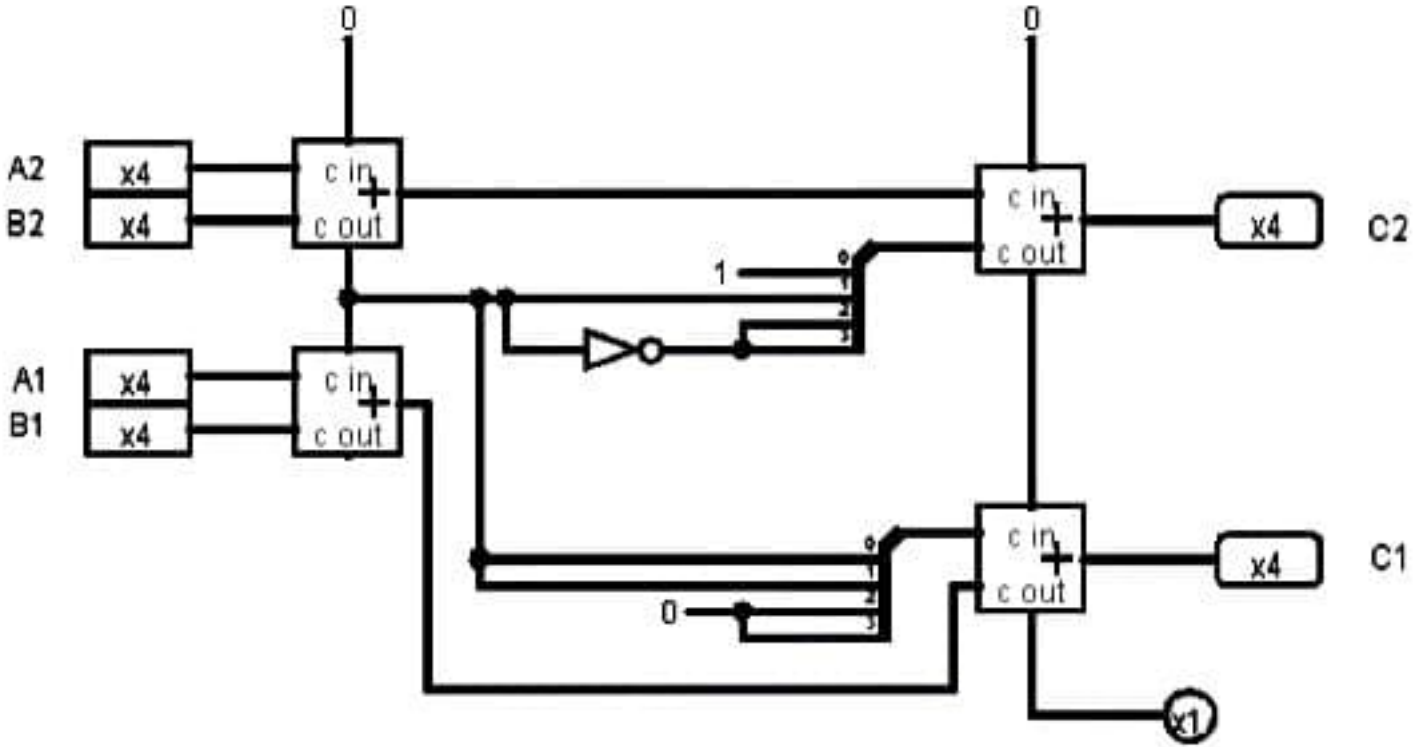
A1A2 + B1B2 = C1C2